ブロック図

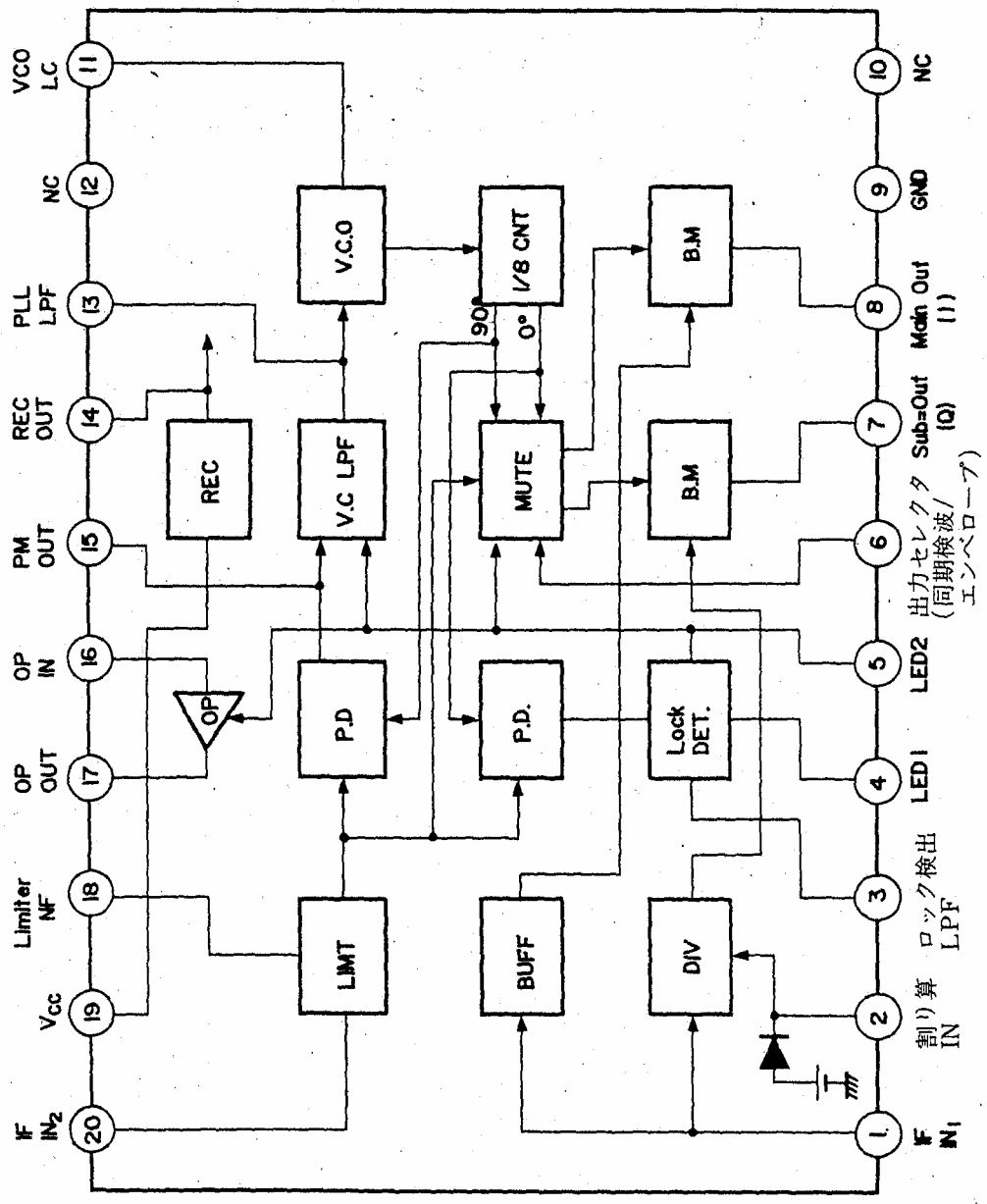

DIV: Divider
P.D: Phase Detector
B.M: Ballanced Modulator
LIMT: Limiter
Op: Operational Amp
REG: Regulator
V.C.O: Voltage Controlled Oscillator
CNT: Counter
LPF: Low Pass Filter
PLL: Phase Locked Loop

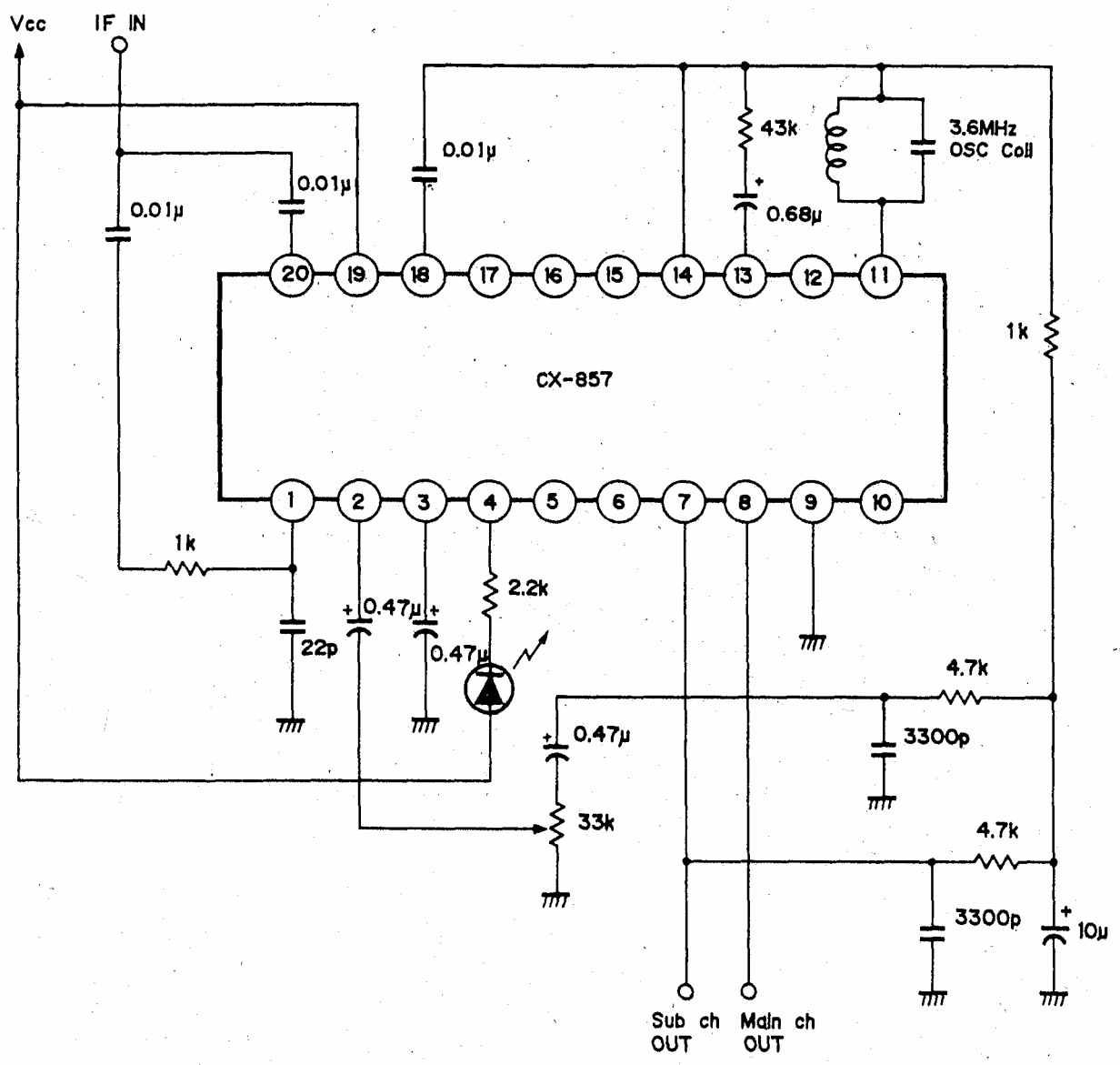
Vcc
IF IN
0.01μ
0.01μ
0.01μ
43k
0.68μ
3.6MHz
OSC Coil
20
19
18
17
16
15
14
13
12
11
1k
CX-857
1
2
3
4
5
6
7
8
9
10
1k
22p
0.47μ
0.47μ
2.2k
4.7k
3300p
0.47μ
33k
4.7k
3300p
10μ
Sub ch
OUT
Main ch
OUT